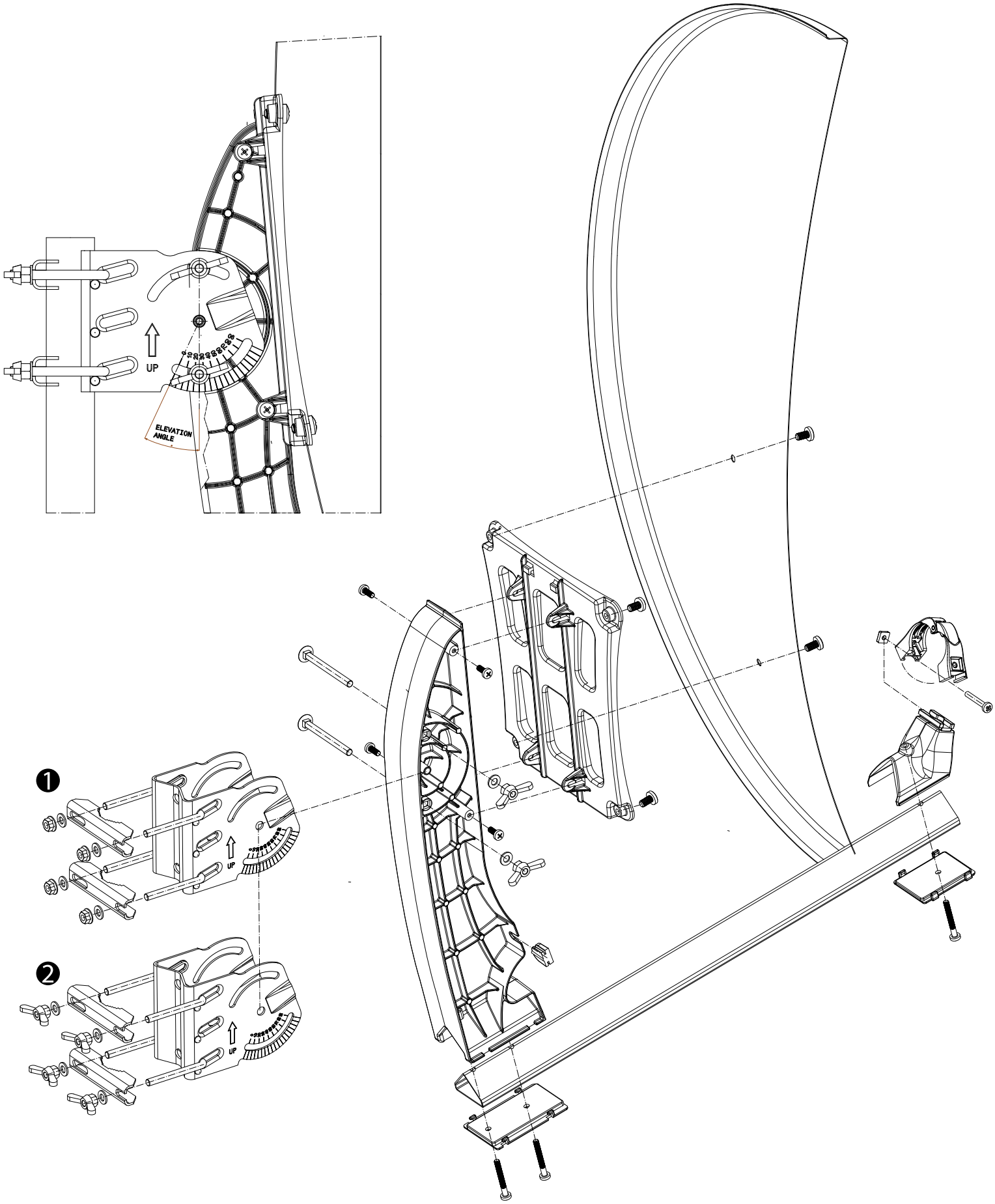
UP
ELEVATION ANGLE
❶
UP
❷
UP